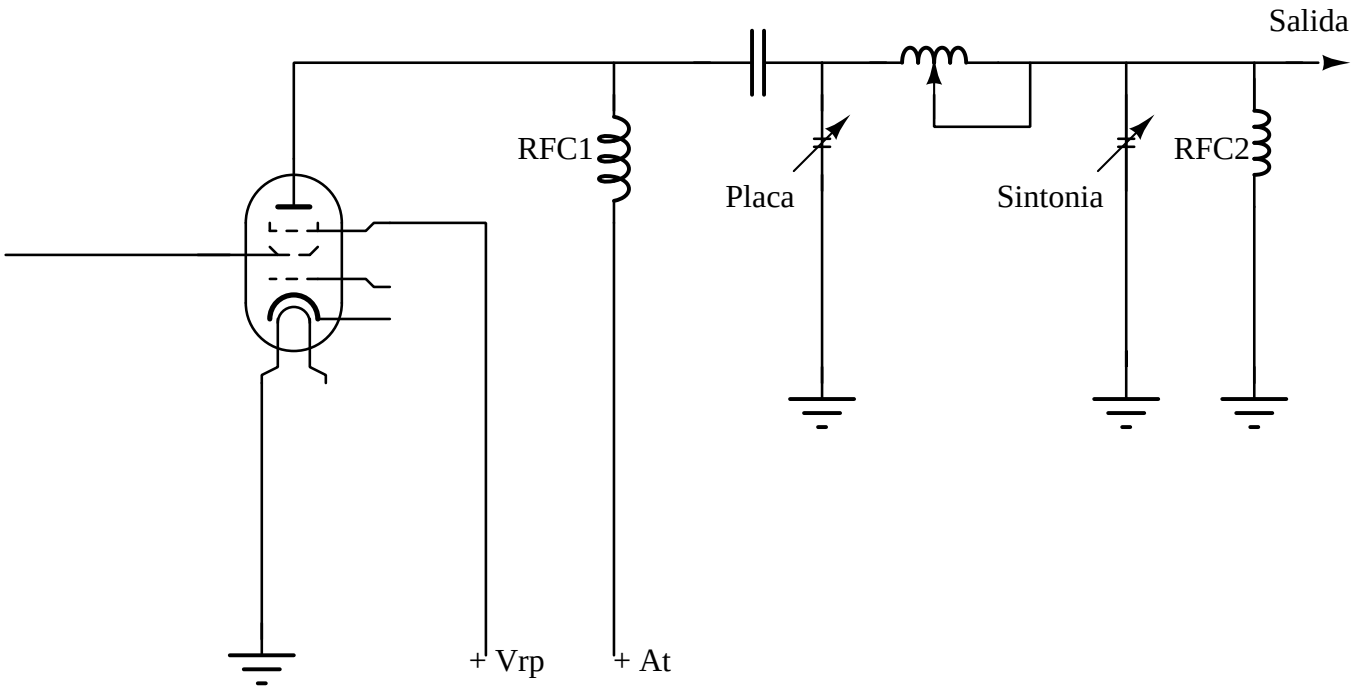
Salida
RFC1
Placa
Sintonia
RFC2
+ Vrp
+ At