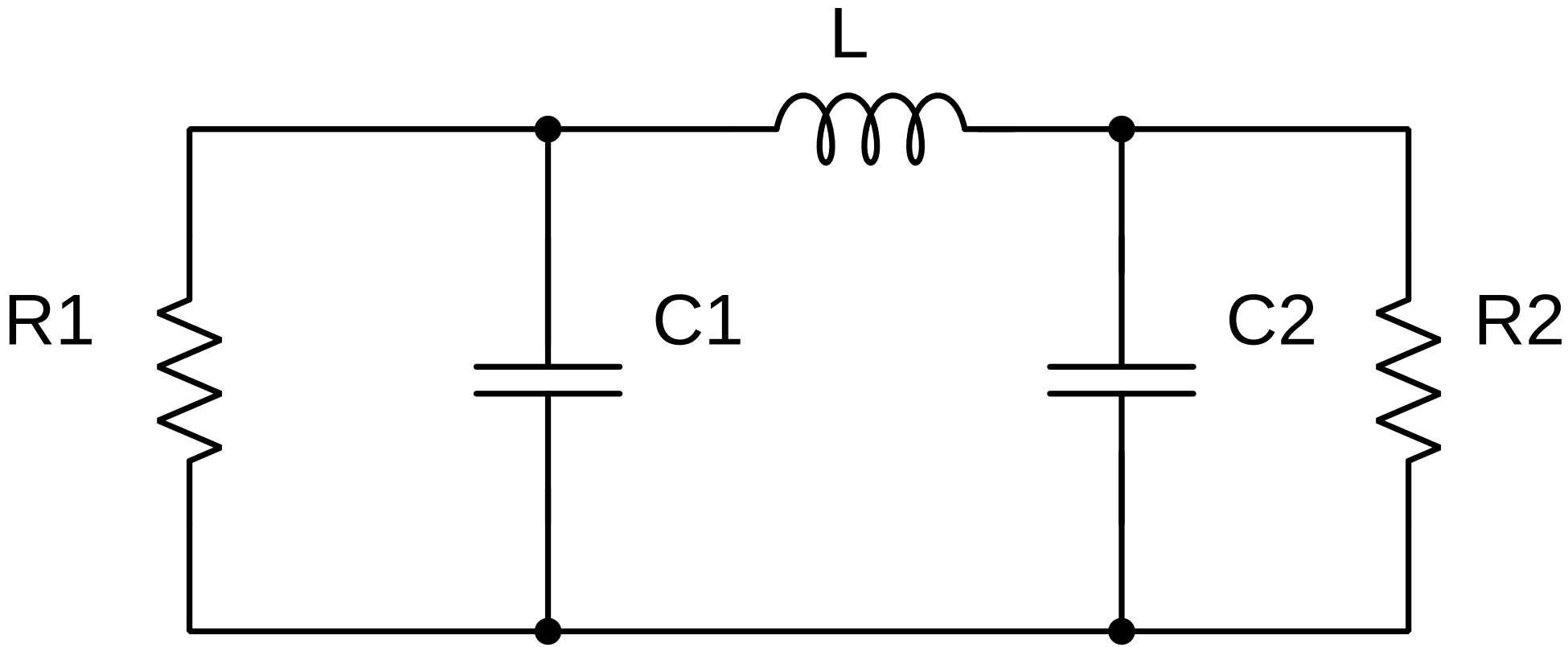
L
R1
C1
C2
R2