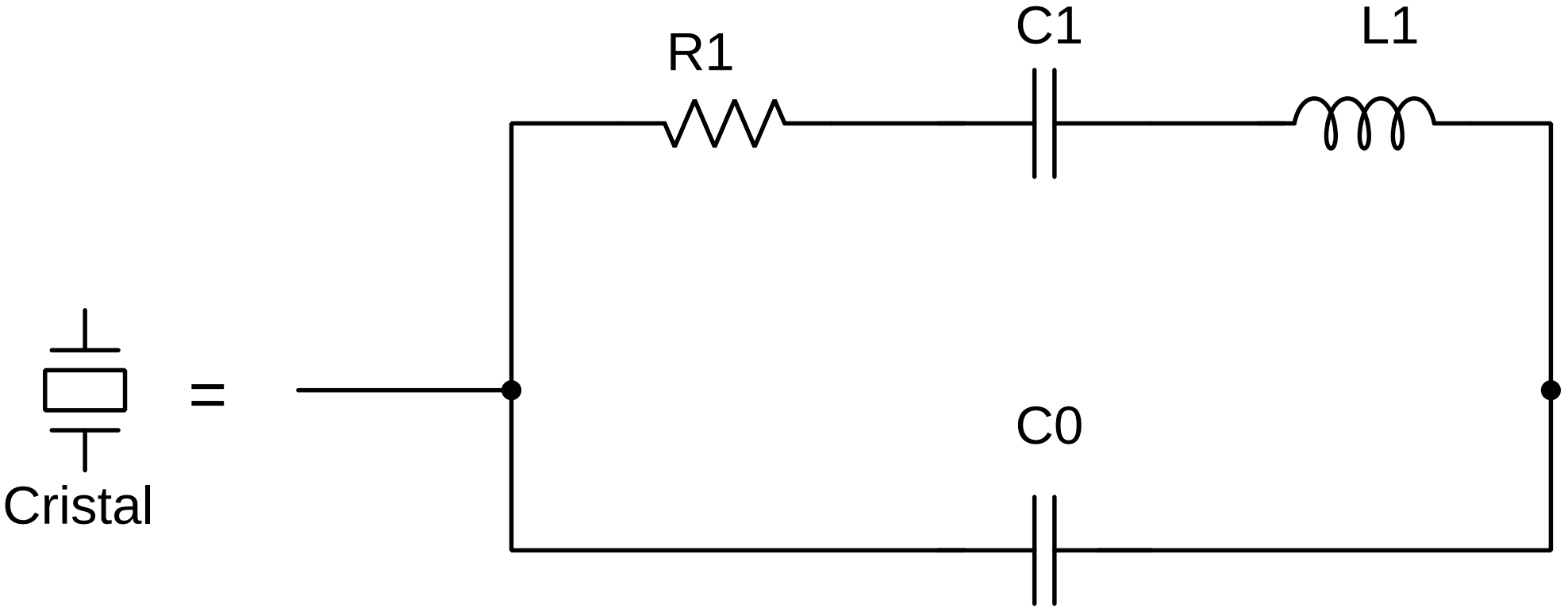
R1
C1
L1
=
C0
Cristal